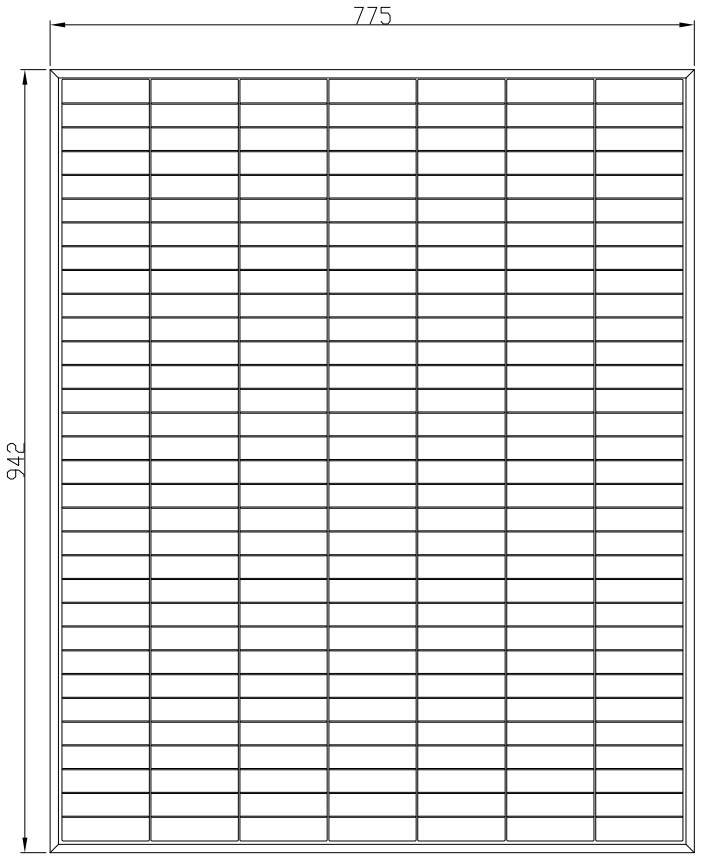
775
942

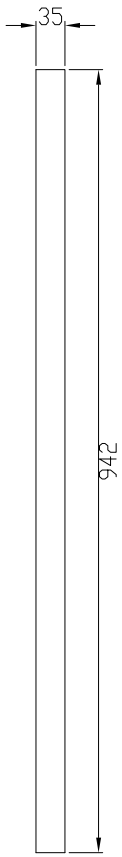
35
942

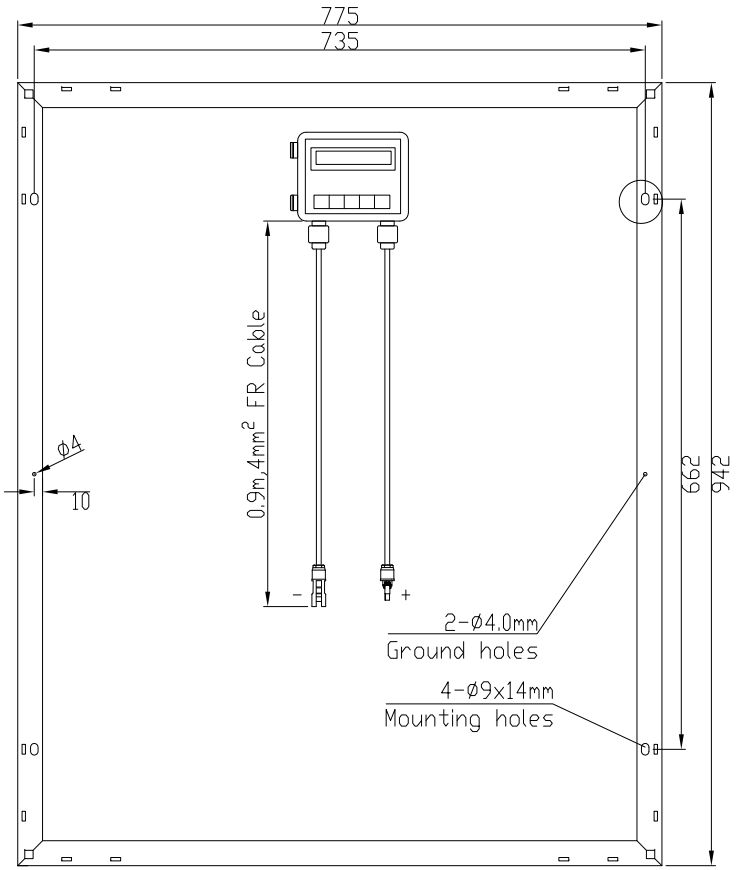
775
735
0.9m,4mm² FR Cable
ϕ4
10
662
942
2-ϕ4.0mm
Ground holes
4-ϕ9x14mm
Mounting holes
9
14